CHIAH CHYUN **Machinery** Advanced Machining Solutions

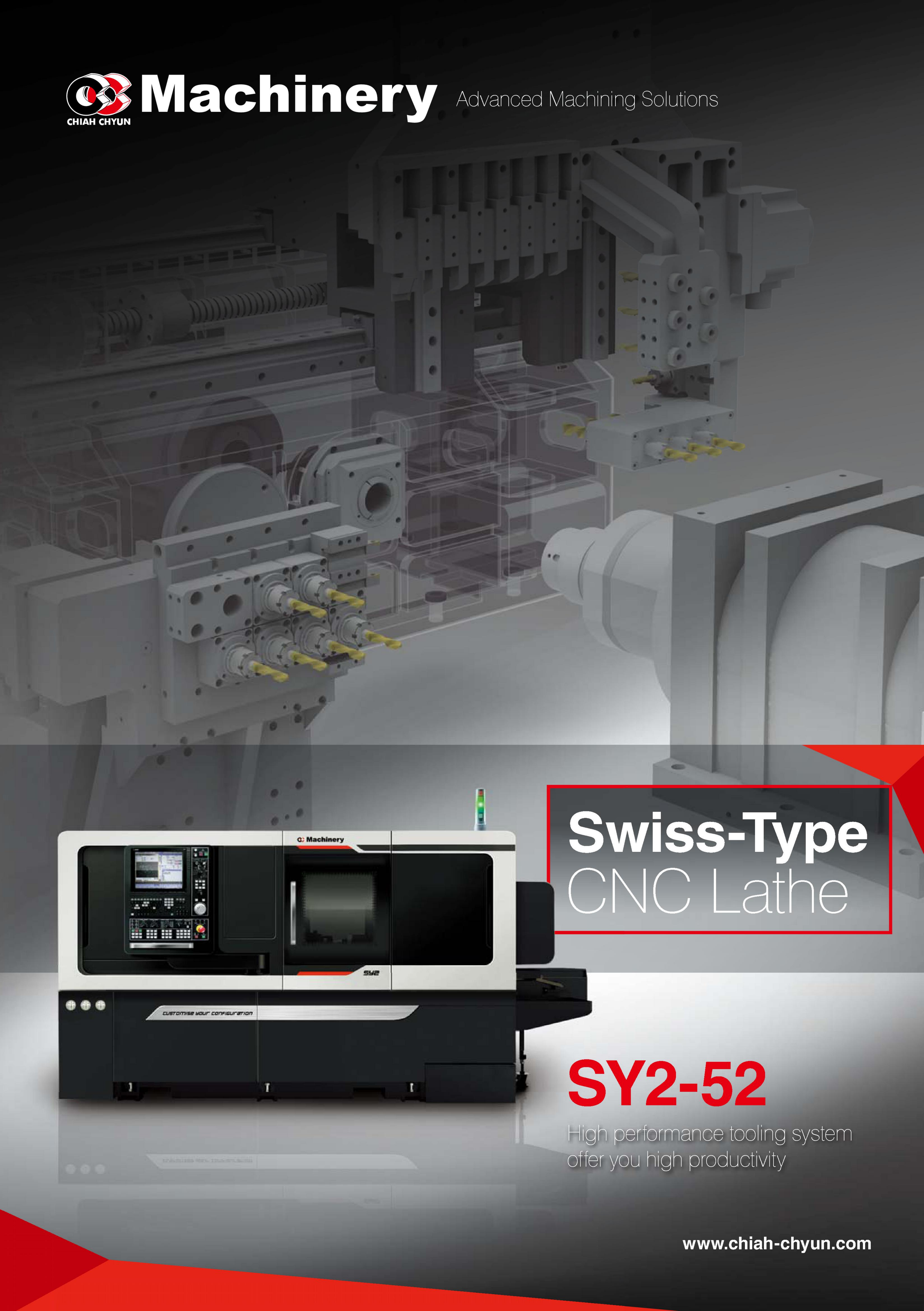

Swiss-Type CNC Lathe

SY2-52

High performance tooling system
offer you high productivity

www.chiah-chyun.com

SY2 Swiss-Type CNC Lathe

Feature

- The SY2-52 is a Swiss-Type turning and milling center with multi-axis synchronous control, double spindle, and complete tool systems on both front & back sides to offer highly efficient parts processing in a single cycle.
- With / Without guide bush device depends on part length, easy to change machining type.
- Mitsubishi M80 series controller with multi-core CPU provides fast programming, smoother operations at high speed, and high precision control ability.

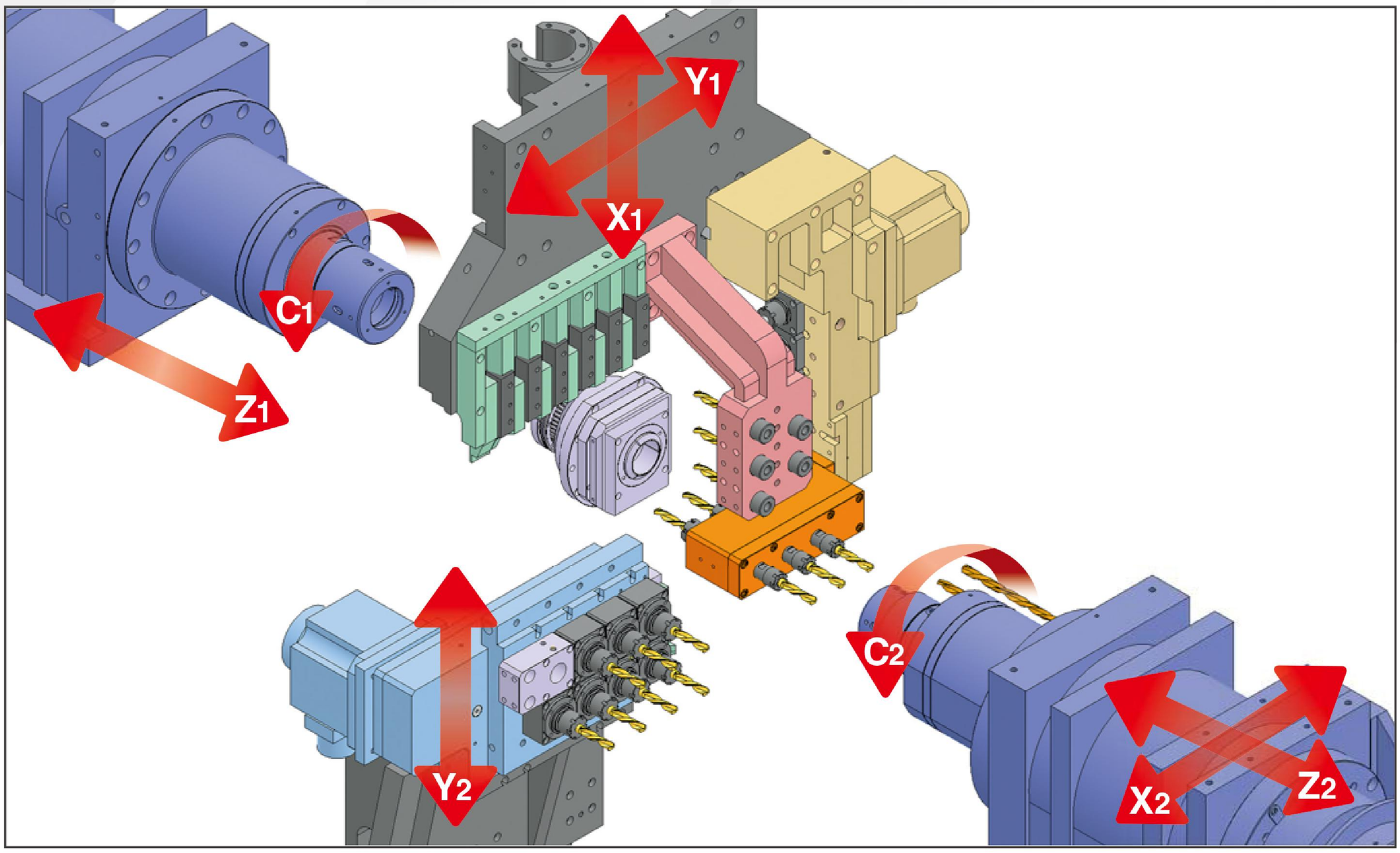

Front Tooling System	
O.D. Tools	6 pcs
Front I.D. Tools	5 pcs
Rear I.D. Tools*	5 pcs
Radial Live Tools	5 pcs (max)
Axial Live Tools	6 pcs (max)
Deep Drilling Tools	2 pcs

*Rear I.D. Tool need adopter sleeve.

Multi-Functional Tooling System The Key to Profitability

Back Tooling System	
Live Tools	8 pcs
O.D. Tools	3 pcs

Radial Live Tooling

An expansion adapter for two radial live tool units can be installed, adding extra ER-20 live tools for functional machining.

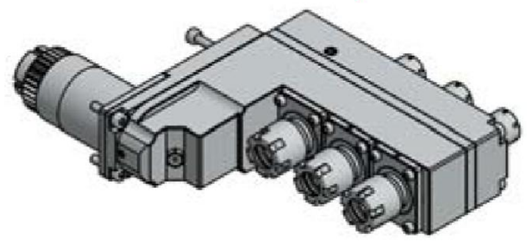

End Milling Unit (St)

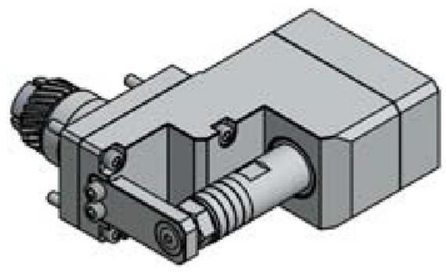

Slitting Saw Unit (Op)

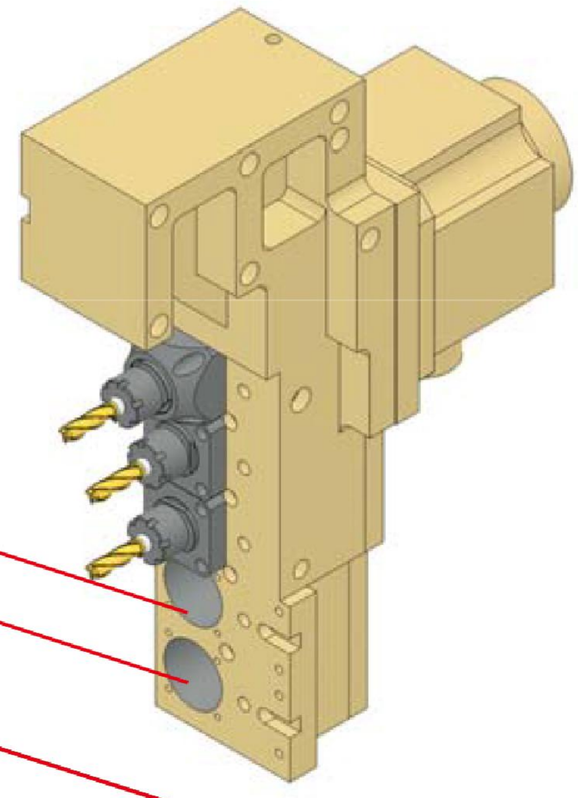

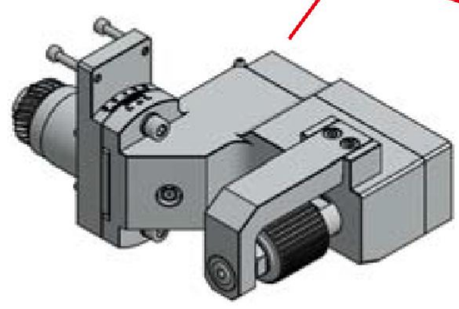

Gear Hobbing Unit (Op)

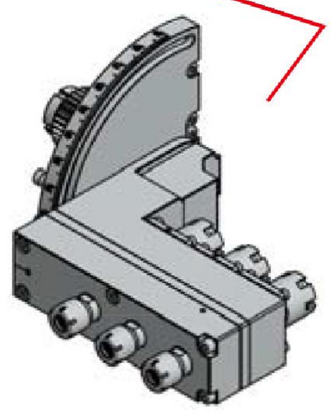

Adjustable Angle Milling Unit (Op)

Deep Drilling Tooling

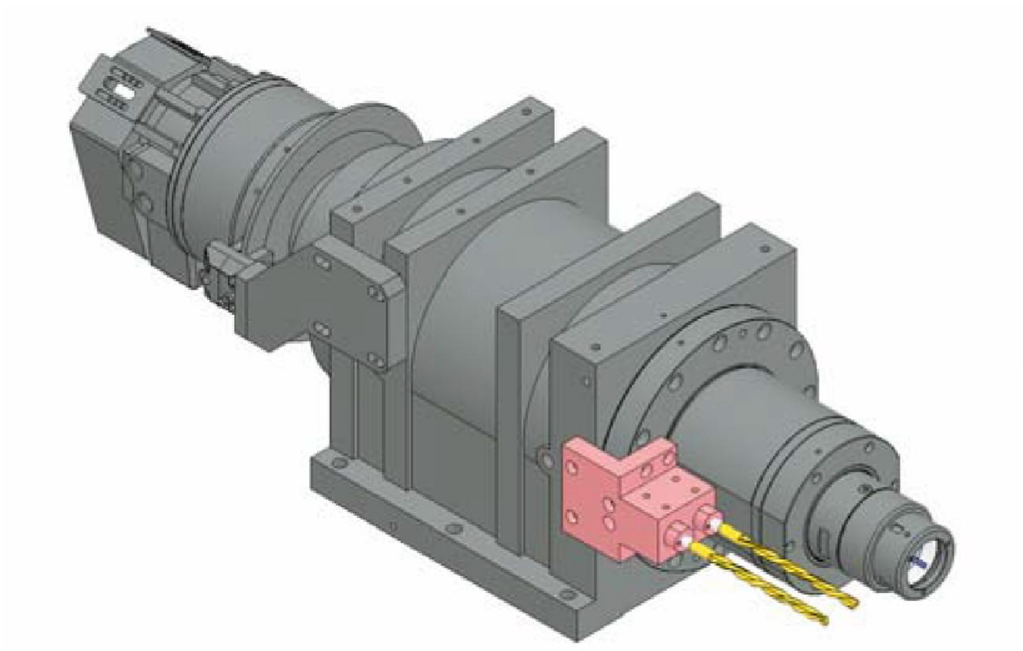

- SY2-52 provides two deep drilling holders beside the sub spindle for increased machining flexibility.
- It is a Ø25, 150 mm deep drilling tool capability with internal coolant supply.

Back Tooling System

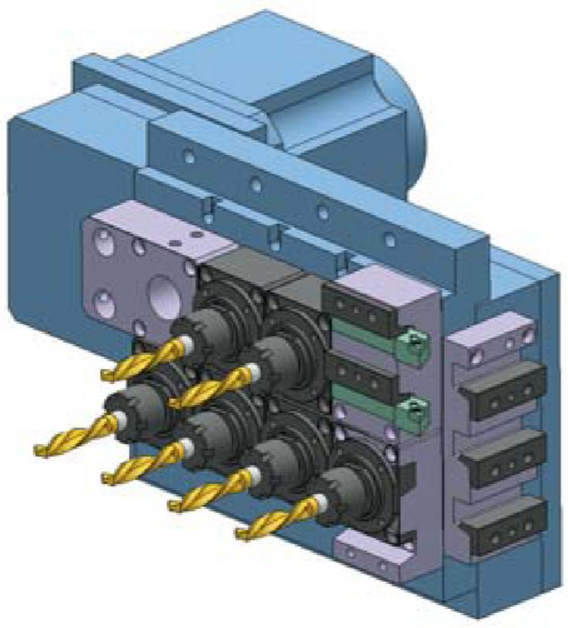

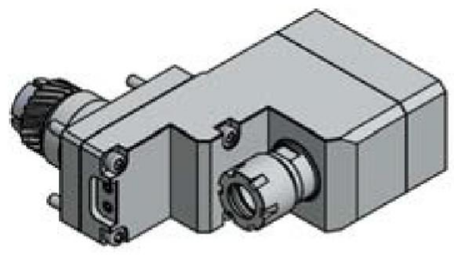

Side Milling Unit (Op)

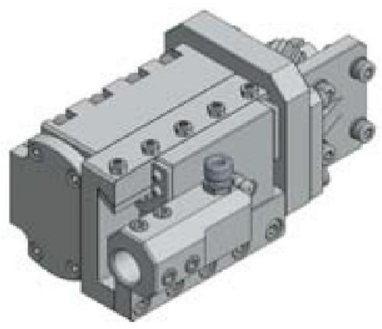

Broaching Unit (Op)

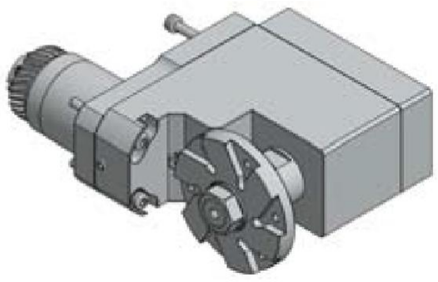

Polygon Milling Unit (Op)

- Back tooling system on Y2 axis can have a max of 8 live tools for multi-functional machining.
- According to your machining needs, the back tooling system can be equipped with radial power tools or fixed tools.
- There are three O.D. tool holders beside the back tooling system for turning operations.

Double Built-in Spindle C Axis

- High performance Mitsubishi built-in spindles for superb machining precision, max speed 6,000 rpm.
- Double spindles on C axis have a min. accuracy unit of 0.001°, and are suitable for milling contour machining.

Spindle Spec Chart

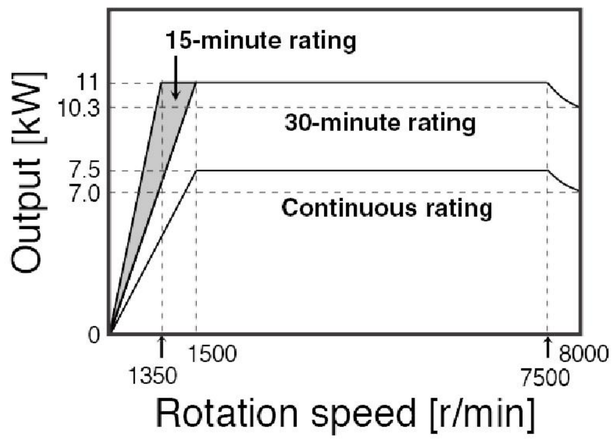

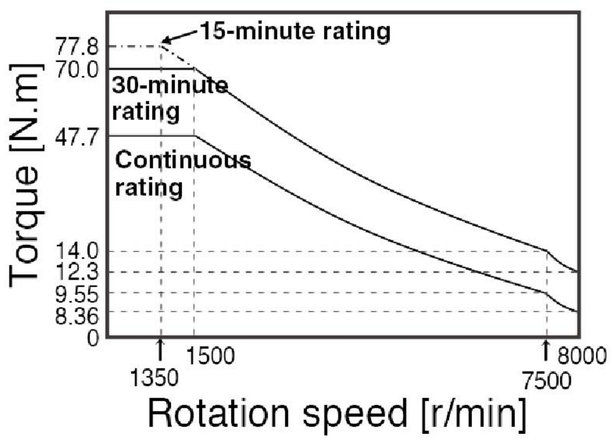

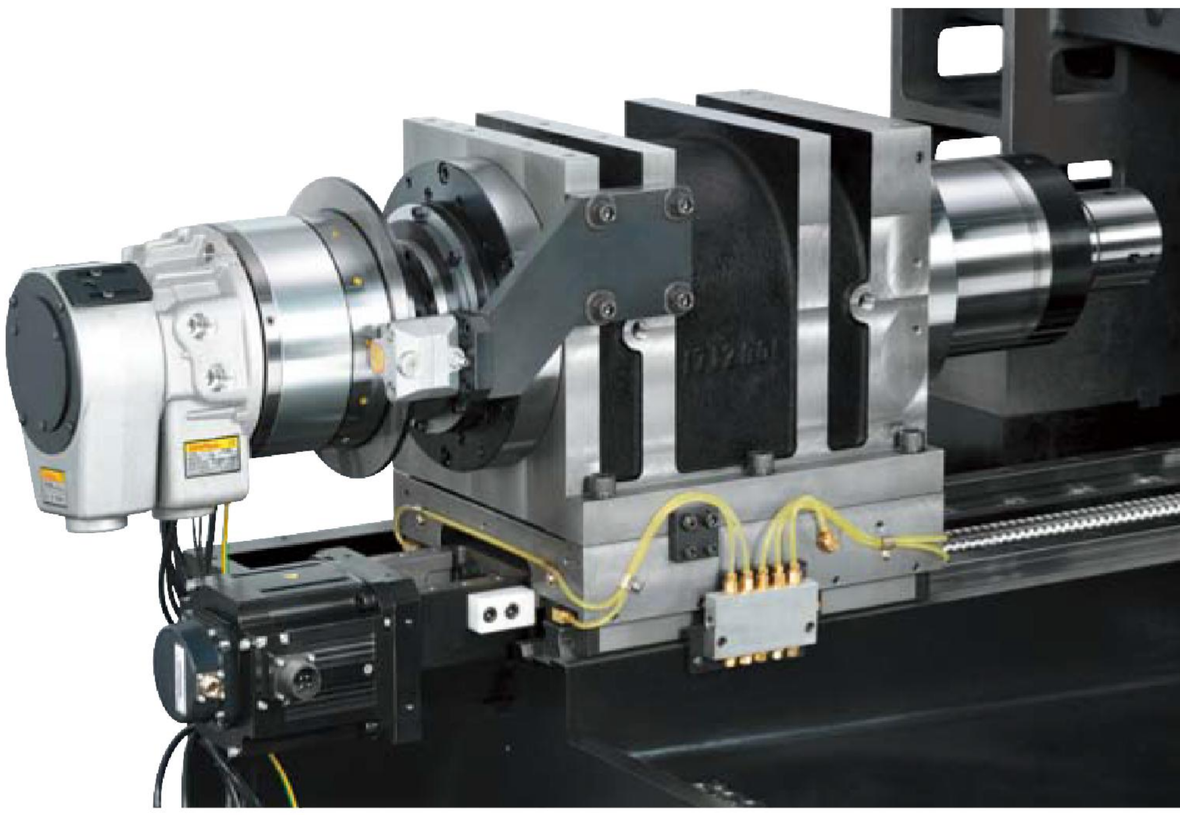

With / Without Guide Bush

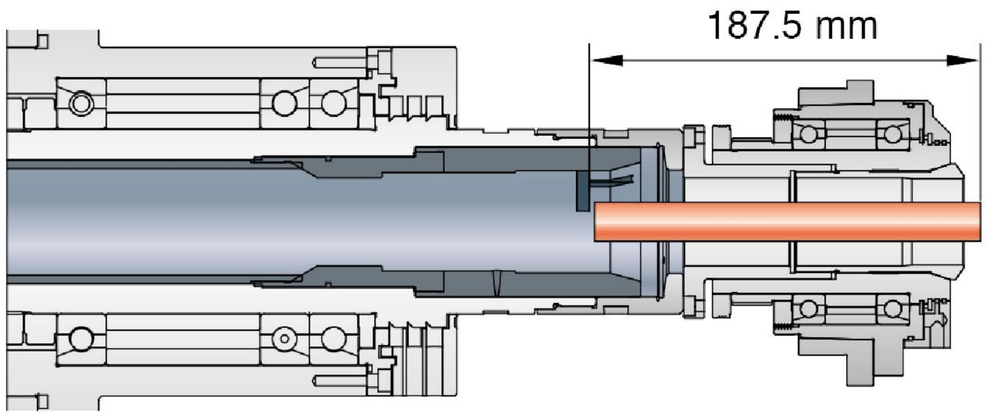

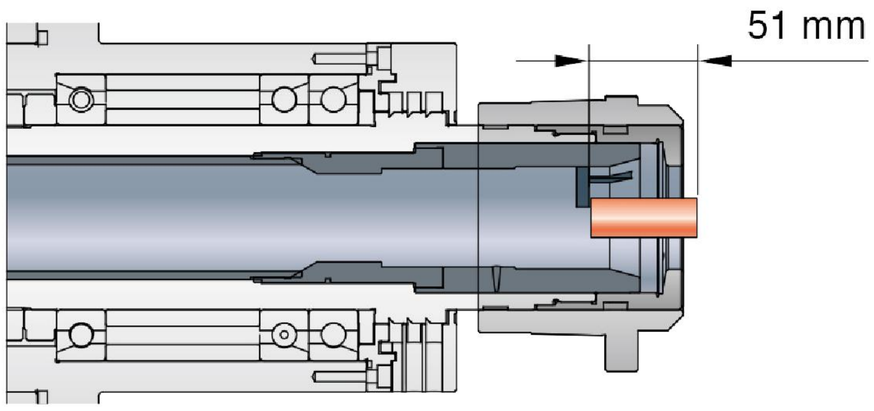

Bush

- Rotary guide bush design reduces bar vibration, improves machining accuracy, and has a max. part length of 350 mm.
- Max. bar capability Ø42.

Bushless

- Without a guide bush, the left material length is shorter, saving production costs.
- Max. bar capability Ø51.

- The guide bush can be exchanged for the spindle in 30 min to shorten idle time.
- Without a guide bush, left material length is reduced to 137 mm, decreasing production costs.

Strength Construction

Built with a heavily ribbed, thermally balanced bed, and a one-piece, hardness treated to HB190 casting (FC-30 grade). The heavily ribbed structure provides powerful stability and firmly support.

Roller Type Linear Guide Ways

Roller type linear guide ways for all axes allows for less frictional resistance, heavier loads, and high rigidity. They also provide higher positional accuracy and machining performance.

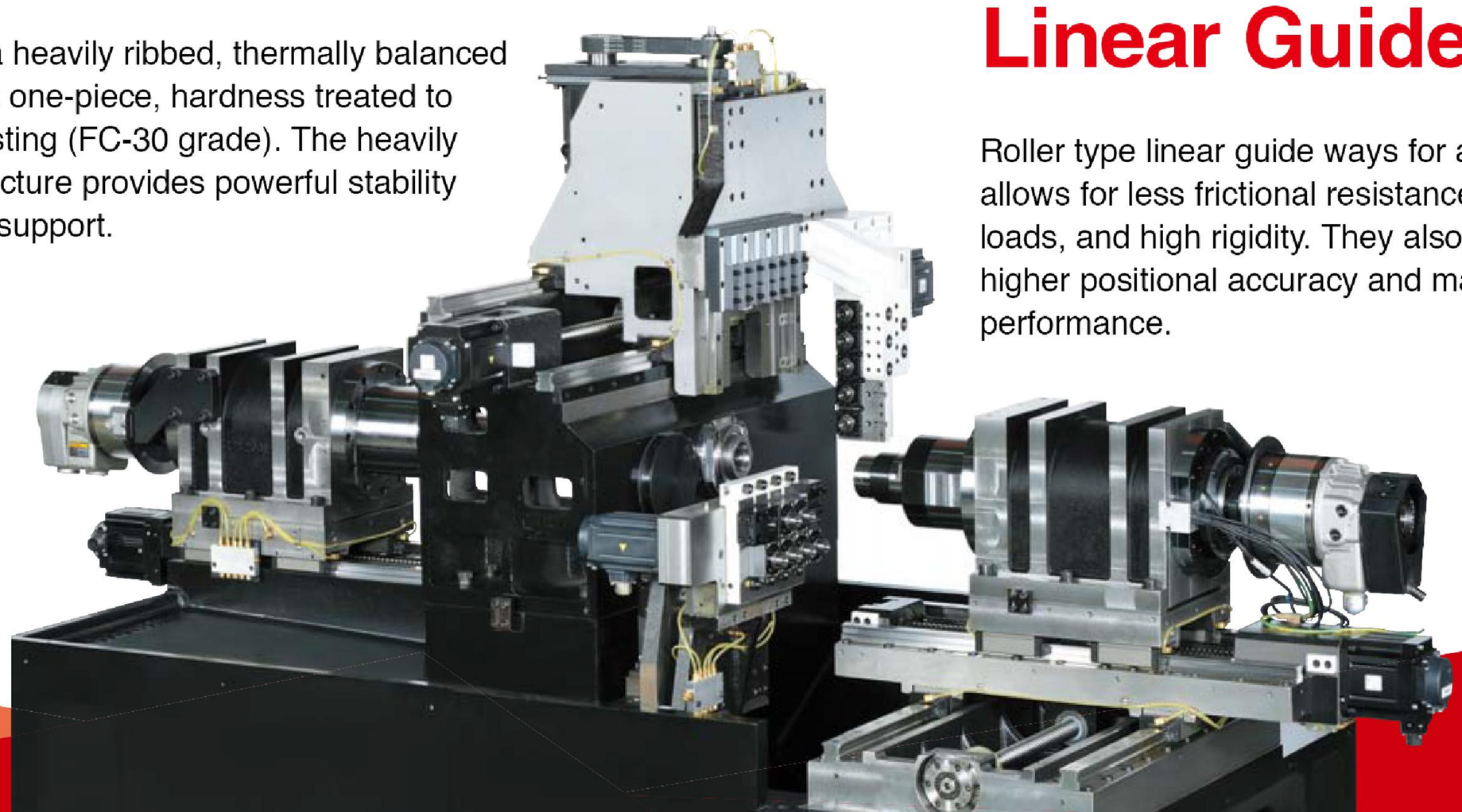

User-friendly Design

Swing Arm Type Control Panel

Double rotary mechanism allows for over 115° of swing arm movement, and 270° of rotary movement for the control panel.

Slide Door Design

The 4 slide doors design allows for easy and convenient operations.

Chip Filtration

In the cutting coolant tank, the chip filtration system prevents chips from going into the coolant pump, thereby improving chip removing efficiency.

Machine Dimensions

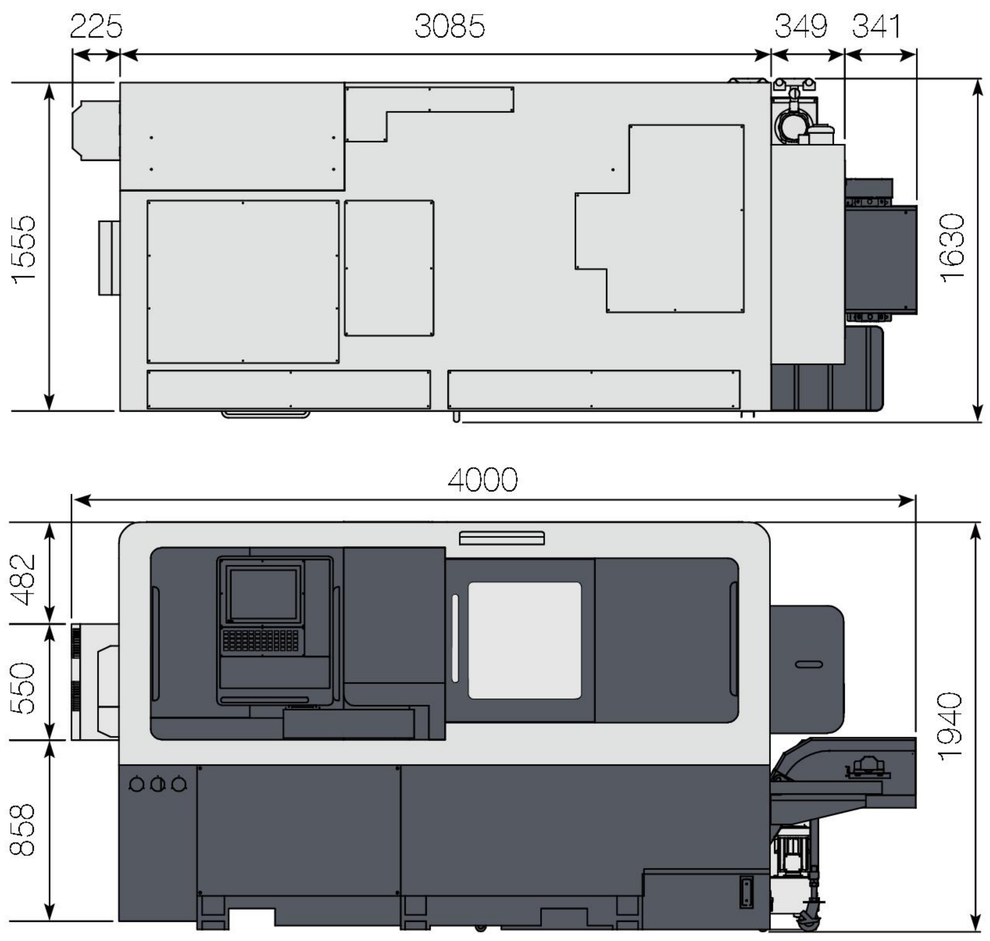

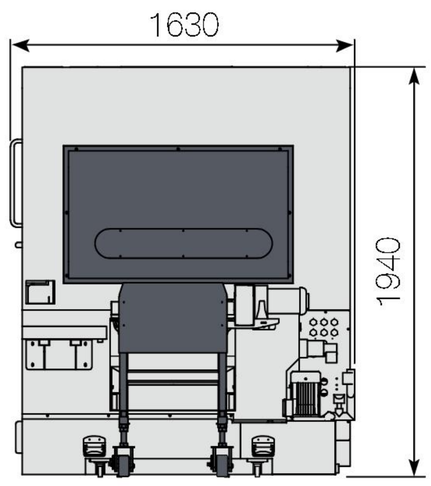

Unit: mm

Axes Travel Diagram

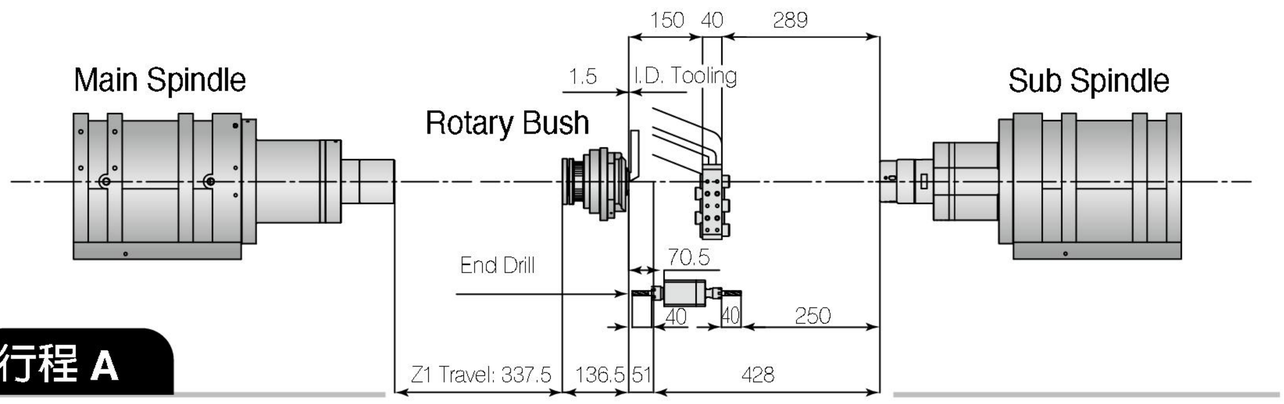

行程 A

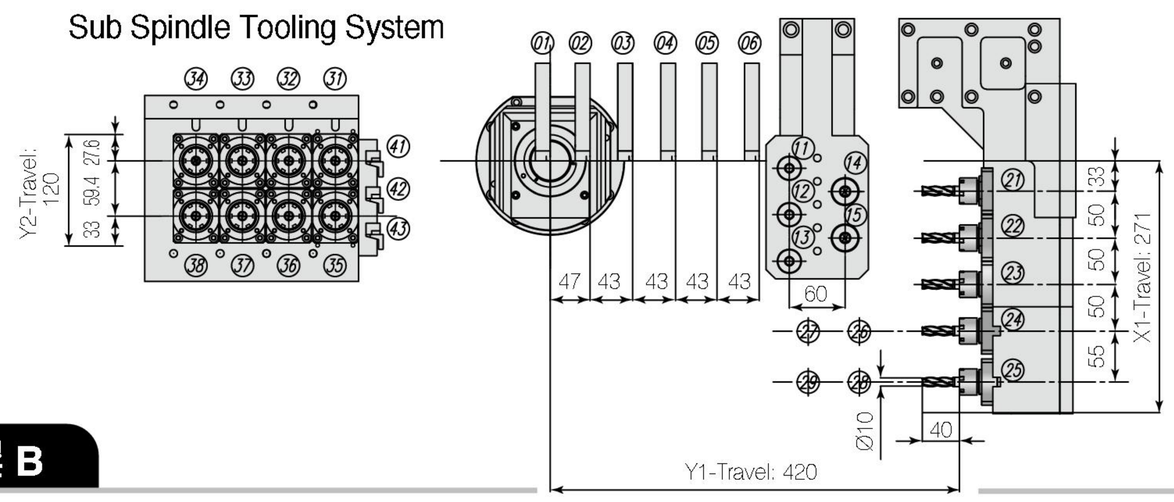

行程 B

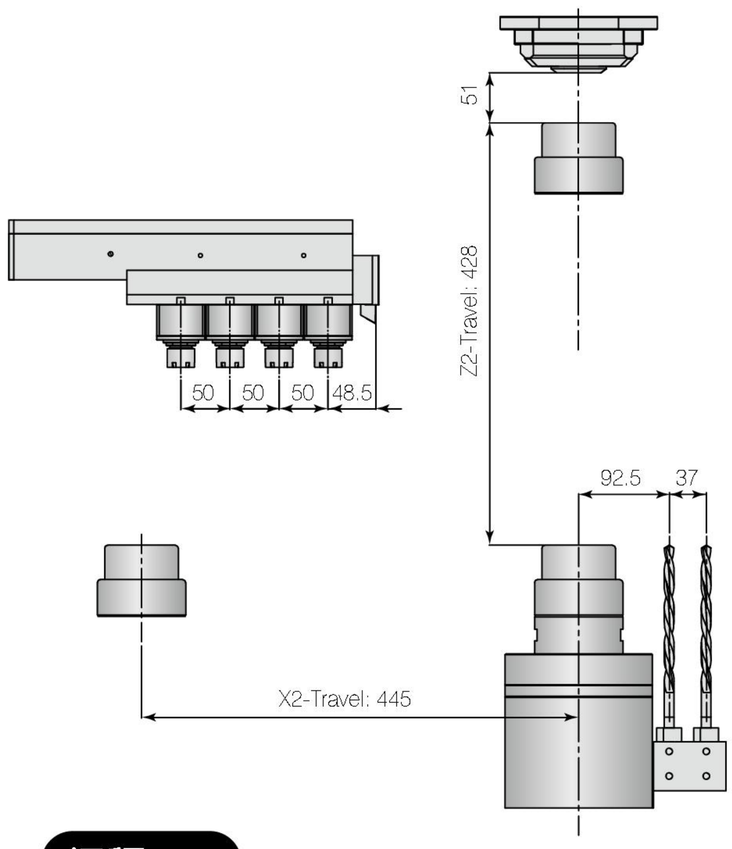

行程 C

Unit: mm

Specifications

Model		SY2-52
Control Unit	Controller	Mitsubishi
Capacity	Max. Turning Dia. (Rotary Guide Bush)	Ø42 mm
	Max. Turning Dia. (Non Guide Bush)	Ø51 mm
	Max. Turning Length (Rotary Guide Bush)	350 mm
	Max. Turning Length (Non Guide Bush)	128 mm
	X1 / Y1 / Z1-Axis Travel	271 / 420 / 337.5 mm
	X2 / Y2 / Z2-Axis Travel	445 / 120 / 428 mm
	X1 / Y1 / Z1-Rapid Travel Speed	30 M/min
	X2 / Z2-Rapid Travel Speed	30 M/min
	Y2-Rapid Travel Speed	8 M/min
	Min. Input Unit	0.001 mm
Main Spindle	Collet of Spindle (Rotary Guide Bush)	TRB-42
	Collet of Spindle (Non Guide Bush)	TRB-52
	Spindle Motor	7.5 / 11 kw
	Spindle Max. rpm	6000 rpm
	C Axis Index Positioning	0.001°
	Center Height	1095 mm
Main Spindle Tool System	No. of O.D. Turning Tool / Size	6 pcs / □16 (Opt: 5 pcs / □20)
	No. of I.D. Turning Tool / Size	5 pcs / Ø25
	No. of Radial Live Tooling / Size	5 pcs / ER-20
	No. of Axis Live Tooling	3 pcs
	No. of Axis Live Tooling Size (Front / Back)	ER-20 / ER-16
	Live Tooling Motor	2.2 kw
	Live Tooling Max. Speed	6000 rpm
Sub Spindle	Max. Bar Feeding Dia.	Ø51
	Collet of Sub Spindle	TRB-52
	Sub Spindle Motor	7.5 / 11 kw
	Sub Spindle Max. rpm	6000 rpm
	C Axis Index Positioning	0.001°
Sub Spindle Tool System	No. of Axial Tooling / Size	8 pcs / ER-20
	No. of O.D. Turning Tool / Size	3 pcs / □12
	Deep Drilling Tool Holder / Size	2 pcs / Ø25
	Live Tooling Motor	2.2 kw
	Live Tooling Max. Speed	6000 rpm
Power	Power	57 KVA
	Hydraulic Motor	2 HP
	Spindle Upper Flush Pump	1 HP
	Tool Coolant Pump	1 HP
Machine	Main / Sub Spindle Cooling	Oil Cooling
	Hydraulic Tank	35L
	Coolant Tank Capacity	220L
	Machine Size (Includes Chip Conveyor)	4000 x 1630 x 1940 mm (LxWxH)
	Machine N.W. (Includes Chip Conveyor)	6000 kg

Design and specs subject to change without notice.

Standard Accessories

- Tool Kit
- Chip Washing Coolant Device
- Cutting Fluid Pump
- Cutting Fluid Inspection Device
- Stack Light
- Air Conditioner for Electrical Cabinet
- Auto Power Breaker
- Auto Bar Feeder Interface
- Main & Sub Spindle Fixed Air Blow
- Air Blow Through Sub Spindle & Part Ejector
- Finished Part Catcher & Conveyor
- Main & Sub Spindle Hydraulic Clamping System
- Steel Belt Chip Conveyor
- End Milling Unit

Optional Accessories

- Voltage Stabilizer / Transformer
- Chip Cart
- Bar Feeder
- Coolant Chiller
- High Pressure Coolant Device
- Gear Hobbing Unit
- Polygon Milling Unit
- Broaching Unit
- Side Milling Unit
- Slitting Saw Unit
- Adjustable Angle Milling Unit

CHIAH CHYUN Machinery

CHIAH CHYUN MACHINERY CO., LTD.

T 886-4-2533-7614 info@chiah-chyun.com

F 886-4-2532-9524 www.chiah-chyun.com

42944 No.16, Ln. 52, Sanshe Rd., Shengang Dist., Taichung City, Taiwan